Work Order ID 70778

Wednesday, June 15, 2011 9:10:40 AM

Item ID: D3065-041 **Accept** **Setup Start**

Revision ID: **Stop**

Item Name: Step Leg Assembly Hi

Start Date: 6/15/2011 **Start Qty:** 40.00 **Cust Item ID:**

Required Date: 6/22/2011 **Req'd Qty:** 40.00 **Customer:**

Reference:

Approvals: **Process Plan:** ___ **Date:** 11-06-15 **Tooling:** ___ **Date:** ___ **Run Start**

QC: ___ **Date:** ___ **SPC (Y/N):** ___ **Date:** ___ **Stop**

Sequence ID/ Work Center ID	Operation Description	Set Up/ Run Hours	Tool ID	Tool #	Plan Code	Accept Qty	Reject Qty	Reject Number	Insp. Stamp
Draw Nbr / **Revision Nbr**									
D3065 / Rev B									
100	Small Fab	0.00							
Small Fab	**Memo**	0.00							
Small Fab	Assemble as per Dwg D3065 and Identify as D3065-041								
110	QC5- Inspect part completeness to step on W/O	0.00							
QC	**Memo**	0.00							
Quality Control									
120	Identify as per dwg & Stock Location: WA	0.00							
Packaging	**Memo**	0.00							
Packaging									

11/06/16 40

counts x40

11.08.24 40 ø

Work Order ID 70778

Wednesday, June 15, 2011 9:10:40 AM

Item ID: D3065-041 **Accept** **Setup Start**

Revision ID:

Item Name: Step Leg Assembly Hi **Stop**

Start Date: 6/15/2011 **Start Qty:** 40.00 **Cust Item ID:**

Required Date: 6/22/2011 **Req'd Qty:** 40.00 **Customer:**

Reference:

Run Start

Approvals: **Process Plan:** _____ **Date:** _____ **Tooling:** _____ **Date:** _____

Stop

QC: _____ **Date:** _____ **SPC (Y/N):** _____ **Date:** _____

Sequence ID/ Work Center ID	Operation Description	Set Up/ Run Hours	Tool ID	Tool #	Plan Code	Accept Qty	Reject Qty	Reject Number	Insp. Stamp
130	QC21- Final Inspection - Work Order Release	0.00							
QC	Memo	0.00							
Quality Control									

11/8/25

CL11108125

Picklist Print

Wednesday, June 15, 2011 9:10:59 AM

Work Order ID: 70778

Parent Item: D3065-041

Parent Item Name: Step Leg Assembly Hi

Start Date: 6/15/2011 **Required Date:** 6/22/2011

Start Qty: 40.00 **Required Qty:** 40.00

Comments: IPP Rev: C□02.11.01□Incorporated D3066-1 IPP□KJ/RF

Component Item ID/ Item Name	Replacement Item ID	Mfg/ Purch	Bin Item	Primary Location	Last Location	Route Seq ID	Unit of Measure	Qty on Hand	Qty per Kit	Total Qty	Qty Issued	Date Issued	Status
D3065-1		Manufactured	No			100	Each	22.0000	1	40			
Step Spacer													
				Location			**Loc Qty**		**Loc Code**				
				GA			22						
					68332		22			22			
D3065-3		Manufactured	No			100	Each	8.0000	1	40			
Step Spacer													
				Location			**Loc Qty**		**Loc Code**				
				GA			8						
					68333		8			8			
D3065-5		Manufactured	No			100	Each	82.0000	2	80			
Step Leg													
				Location			**Loc Qty**		**Loc Code**				
				GA			82						
					67222		2			1			
					69825		80			79			
D3065-7		Manufactured	No			100	Each	1.0000	1	40			
Step Spacer													
				Location			**Loc Qty**		**Loc Code**				
				GA			1						
					68335		1			5			

11/06/15 B69826 (18x)

11/06/15 B69827 (32x)

11/06/15 B69828 (35x)

Picklist Print

Wednesday, June 15, 2011 9:11:00 AM

Work Order ID: 70778

Parent Item: D3065-041

Parent Item Name: Step Leg Assembly Hi

Start Date: 6/15/2011 **Required Date:** 6/22/2011

Start Qty: 40.00 **Required Qty:** 40.00

MS20470AD4-4	Purchased	No	100	Each	2,432.000	30	~~1200~~	4/06/16

Rivet, Universal Head

Location		Loc Qty	Loc Code	
ST139		1818		
	117423	1818		1200
ST319		614		
	116188	548		
	116391	66		

DESIGN	DRAWN BY	DART AEROSPACE LTD HAWKESBURY, ONTARIO, CANADA	
CHECKED PH	APPROVED	DRAWING NO. D3065	REV. B SHEET 1 OF 5
DATE 06.05.23		TITLE STEP LEG ASSEMBLY	SCALE 1:2

A	02.09.11	NEW ISSUE
B	06.05.23	ADD 6061-T6 MATERIAL, ADD SLOTS TO D3065-5

RELEASED
06 06 20

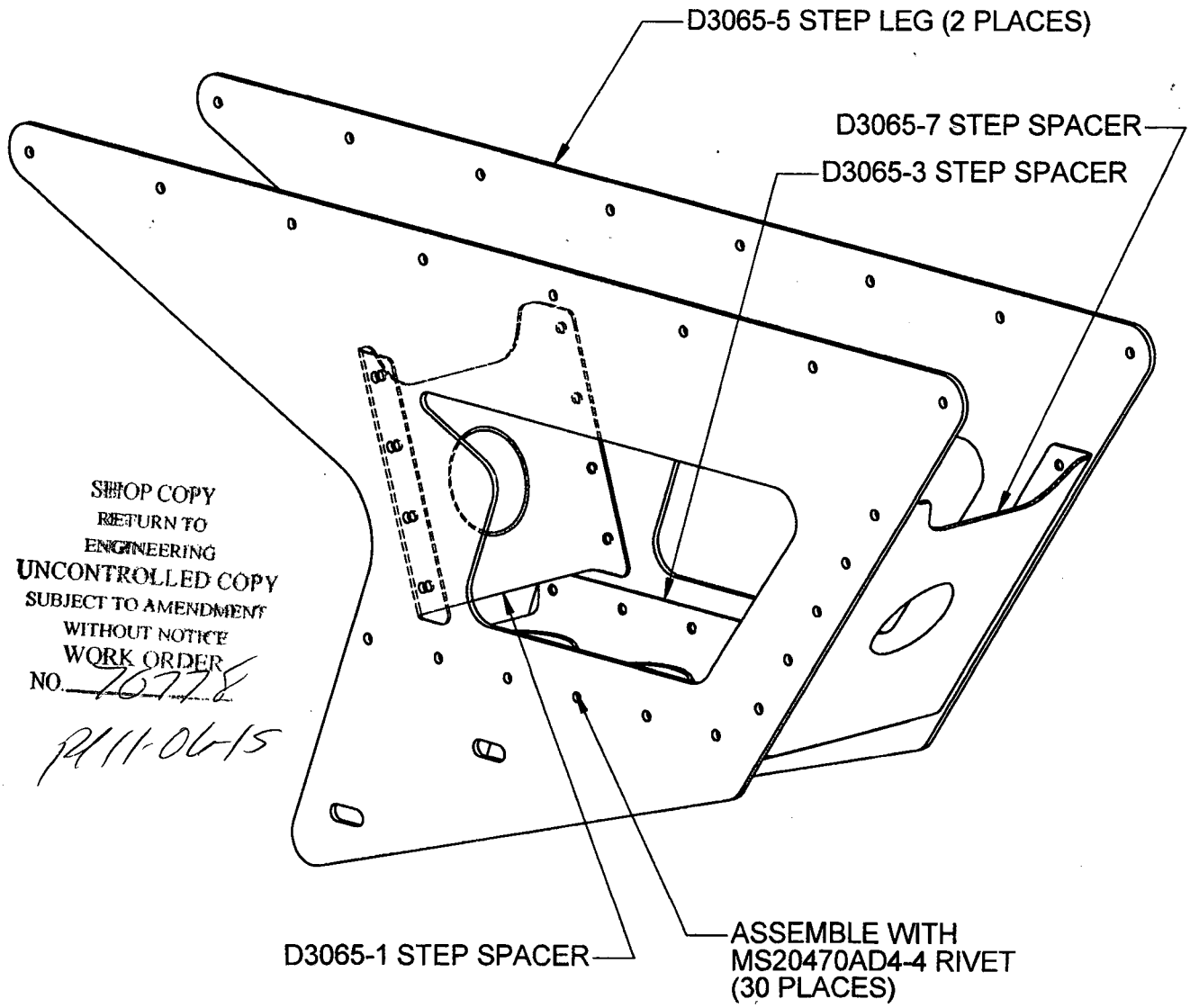

SHOP COPY
RETURN TO
ENGINEERING
UNCONTROLLED COPY
SUBJECT TO AMENDMENT
WITHOUT NOTICE
WORK ORDER
NO. 76778
2011-06-15

D3065-041 STEP LEG ASSEMBLY

Dart Aerospace Ltd

W/O:		WORK ORDER CHANGES					
DATE	STEP	PROCEDURE CHANGE	By	Date	Qty	Approval Chief Eng / Prod Mgr	Approval QC Inspector

Part No: _____ **PAR #:** _____ **Fault Category:** _____ **NCR:** Yes No **DQA:** _____ **Date:** _____

Resolution: _____ **Disposition:** _____ **QA: N/C Closed:** _____ **Date:** _____

NCR:		WORK ORDER NON-CONFORMANCE (NCR)						
DATE	STEP	Description of NC Section A	Corrective Action Section B			Verification Section C	Approval Chief Eng	Approval QC Inspector
			Initial Chief Eng	Action Description Chief Eng	Sign & Date			

NOTE: Date & initial all entries

H:\fFORMS\Quality Assurance\approved QA\NCRWO RevE

DESIGN	DRAWN BY	DART AEROSPACE LTD HAWKESBURY, ONTARIO, CANADA	
CHECKED	APPROVED	DRAWING NO. D3065	REV. B SHEET 2 OF 5
DATE 06.05.23		TITLE STEP LEG ASSEMBLY	SCALE 1:1

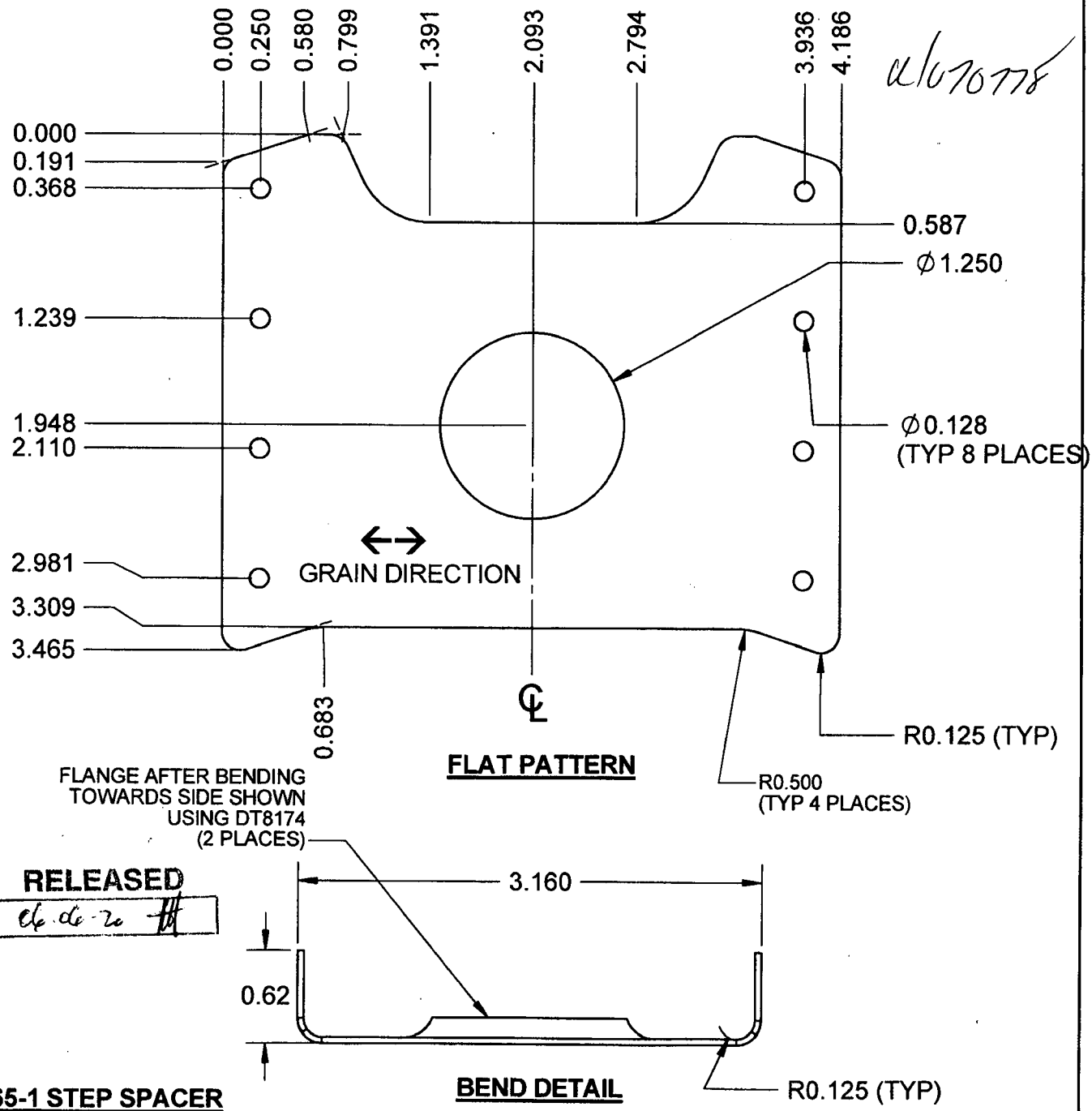

FLAT PATTERN

BEND DETAIL

RELEASED
06-06-20

D3065-1 STEP SPACER

1) MATERIAL: 2024-T3 (QQ-A-250/4) 0.040 THICK (REF DART SPEC. M2024T3S.040)
2) FINISH: ACID ETCH & ALODINE PER DART QSI 005 4.1
3) BREAK ALL SHARP EDGES 0.005 TO 0.010
4) PART IS SYMMETRIC ABOUT CENTERLINE
5) TOLERANCES ARE PER DART QSI 018 UNLESS OTHERWISE NOTED
6) ALL DIMENSIONS ARE IN INCHES

Dart Aerospace Ltd

W/O:		WORK ORDER CHANGES					
DATE	STEP	PROCEDURE CHANGE	By	Date	Qty	Approval Chief Eng / Prod Mgr	Approval QC Inspector

Part No: _____ **PAR #:** _____ **Fault Category:** _____ **NCR:** Yes No **DQA:** _____ **Date:** _____

Resolution: _____ **Disposition:** _____ **QA: N/C Closed:** _____ **Date:** _____

NCR:		WORK ORDER NON-CONFORMANCE (NCR)						
DATE	STEP	Description of NC Section A	Corrective Action Section B			Verification Section C	Approval Chief Eng	Approval QC Inspector
			Initial Chief Eng	Action Description Chief Eng	Sign & Date			

NOTE: Date & initial all entries

DESIGN	DRAWN BY	DART AEROSPACE LTD HAWKESBURY, ONTARIO, CANADA	
CHECKED	APPROVED	DRAWING NO. D3065	REV. B SHEET 3 OF 5
DATE 06.05.23		TITLE STEP LEG ASSEMBLY	SCALE 1:1

w/o 70776

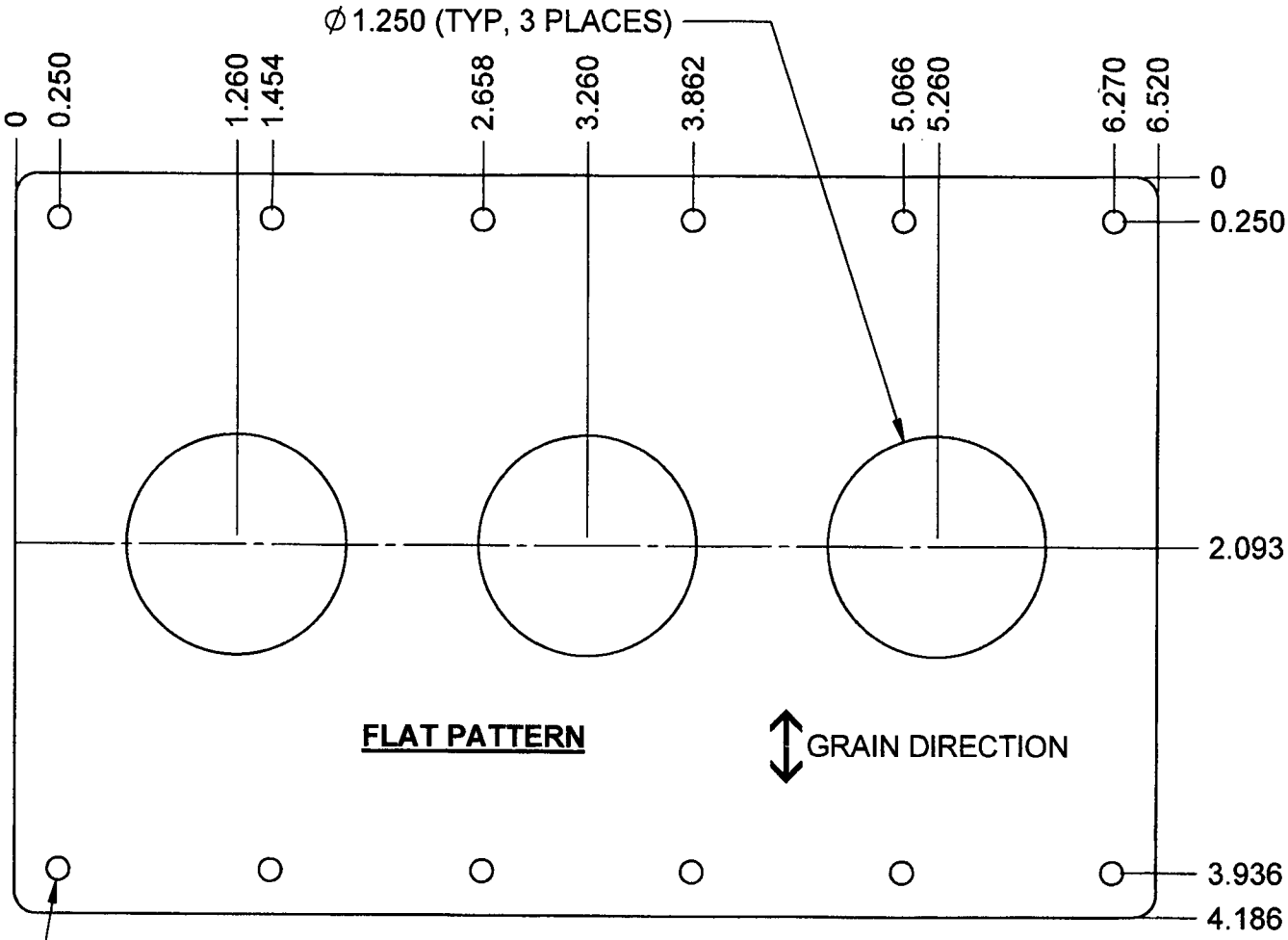

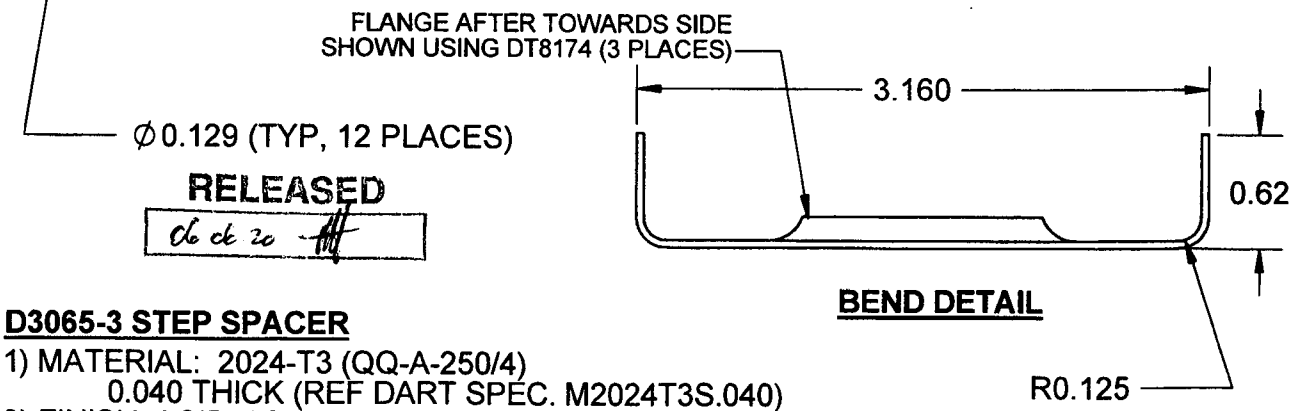

RELEASED
06 06 20

D3065-3 STEP SPACER

1) MATERIAL: 2024-T3 (QQ-A-250/4)
   0.040 THICK (REF DART SPEC. M2024T3S.040)
2) FINISH: ACID ETCH & ALODINE PER DART QSI 005 4.1
3) PART IS SYMMETRIC ABOUT CENTERLINE
4) BREAK ALL SHARP EDGES 0.005 TO 0.010
5) TOLERANCES ARE PER DART QSI 018 UNLESS OTHERWISE NOTED
6) ALL DIMENSIONS ARE IN INCHES

Dart Aerospace Ltd

W/O:		WORK ORDER CHANGES					
DATE	STEP	PROCEDURE CHANGE	By	Date	Qty	Approval Chief Eng / Prod Mgr	Approval QC Inspector

Part No: _____ **PAR #:** _____ **Fault Category:** _____ **NCR:** Yes No **DQA:** _____ **Date:** _____

Resolution: _____ **Disposition:** _____ **QA: N/C Closed:** _____ **Date:** _____

NCR:		WORK ORDER NON-CONFORMANCE (NCR)						
DATE	STEP	Description of NC Section A	Corrective Action Section B			Verification Section C	Approval Chief Eng	Approval QC Inspector
			Initial Chief Eng	Action Description Chief Eng	Sign & Date			

NOTE: Date & initial all entries

H:\fFORMS\Quality Assurance\approved QA\NCRWO RevE

u/070778

RELEASED
06.06.20

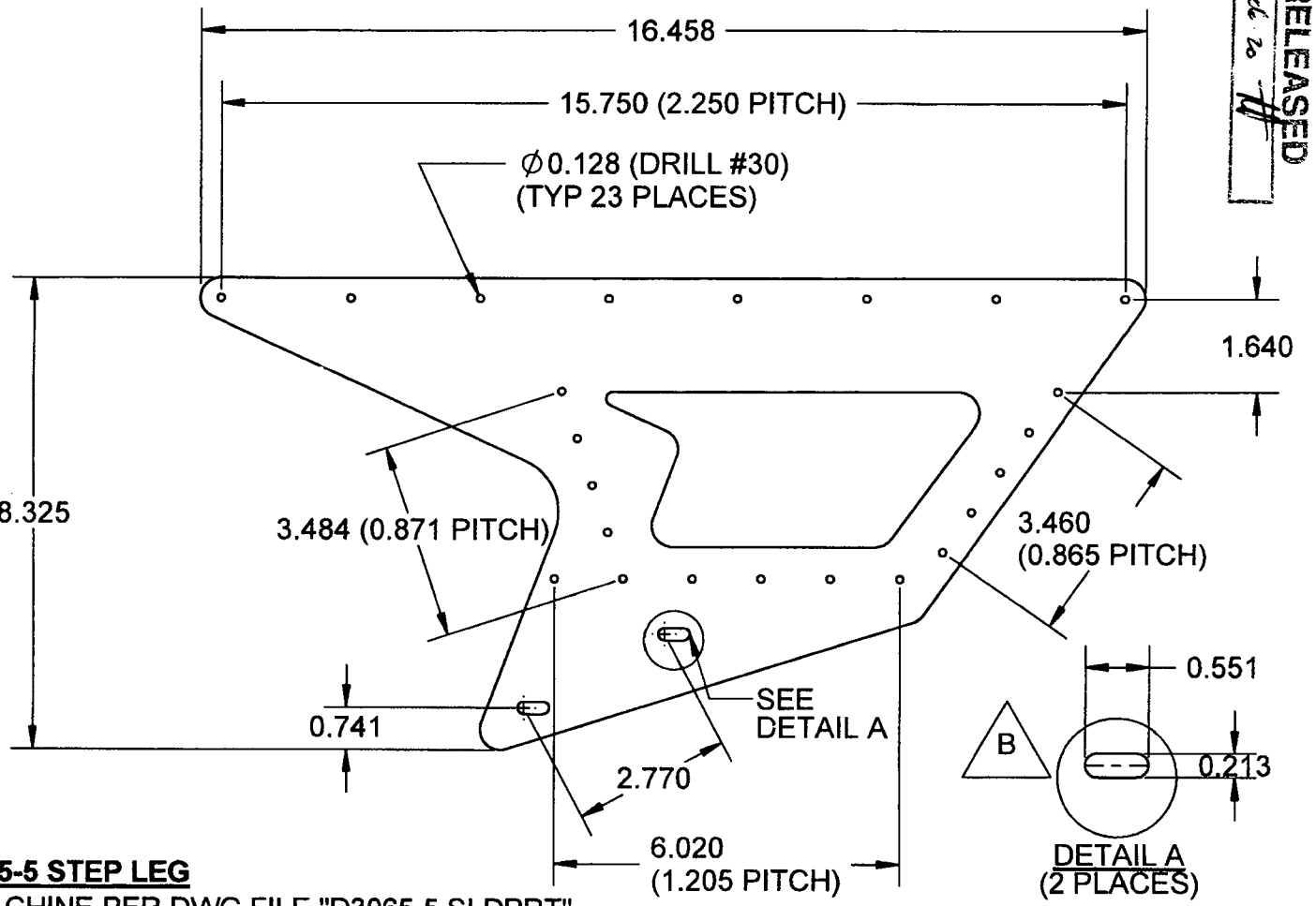

D3065-5 STEP LEG

1) MACHINE PER DWG FILE "D3065-5.SLDPRT"
2) MATERIAL: 6061-T6 (PER QQ-A-250/11 OR AMS 4025 OR AMS 4027) 0.080" THICK
(REF DART SPEC M6061T6S.080)
OR
5052-H32 (PER QQ-A-250/8 OR AMS 4016) 0.080 THICK (REF DART SPEC. M5052H32S.080)
3) FINISH: ACID ETCH & ALODINE PER DART QSI 005 4.1
4) BREAK ALL SHARP EDGES 0.005 TO 0.010
5) TOLERANCES ARE PER DART QSI 018 UNLESS OTHERWISE NOTED
6) ALL DIMENSIONS ARE IN INCHES

DESIGN	DRAWN BY	DART AEROSPACE LTD HAWKESBURY, ONTARIO, CANADA
CHECKED	APPROVED	DRAWING NO. D3065
DATE 06.05.23		TITLE STEP LEG ASSEMBLY
		REV. B
		SHEET 4 OF 5
		SCALE 1:3

Dart Aerospace Ltd

W/O:		WORK ORDER CHANGES					
DATE	STEP	PROCEDURE CHANGE	By	Date	Qty	Approval Chief Eng / Prod Mgr	Approval QC Inspector

Part No: _____ **PAR #:** _____ **Fault Category:** _____ **NCR:** Yes No **DQA:** _____ **Date:** _____

Resolution: _____ **Disposition:** _____ **QA: N/C Closed:** _____ **Date:** _____

NCR:		WORK ORDER NON-CONFORMANCE (NCR)						
DATE	STEP	Description of NC Section A	Corrective Action Section B			Verification Section C	Approval Chief Eng	Approval QC Inspector
			Initial Chief Eng	Action Description Chief Eng	Sign & Date			

NOTE: Date & initial all entries

H:\fFORMS\Quality Assurance\approved QA\NCRWO RevE

DESIGN	DRAWN BY	DART AEROSPACE LTD HAWKESBURY, ONTARIO, CANADA	
CHECKED	APPROVED	DRAWING NO.	REV. B
		D3065	SHEET 5 OF 5
DATE		TITLE	SCALE
06.05.23		STEP LEG ASSEMBLY	1:1

w/o 76778

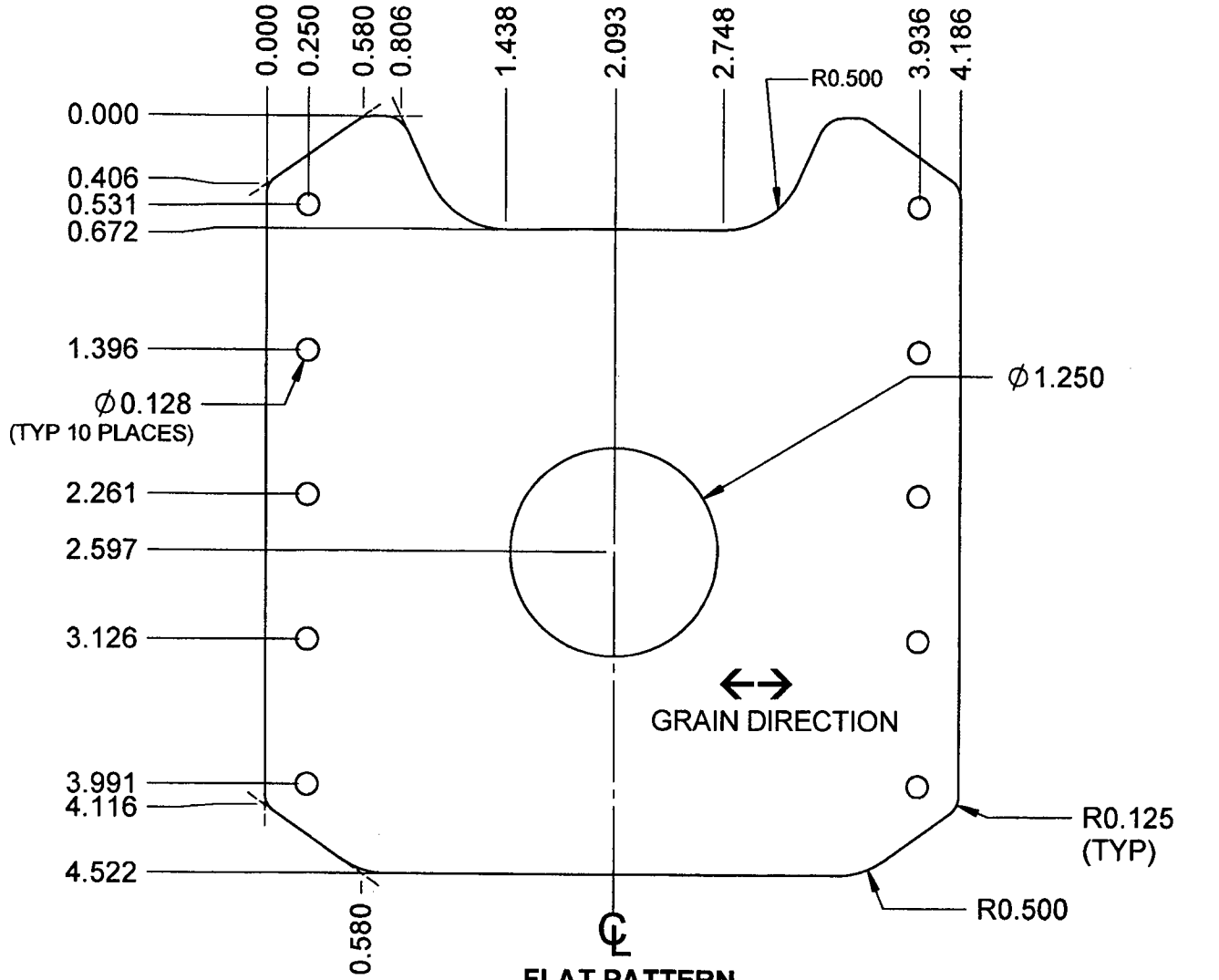

RELEASED
06 06 20

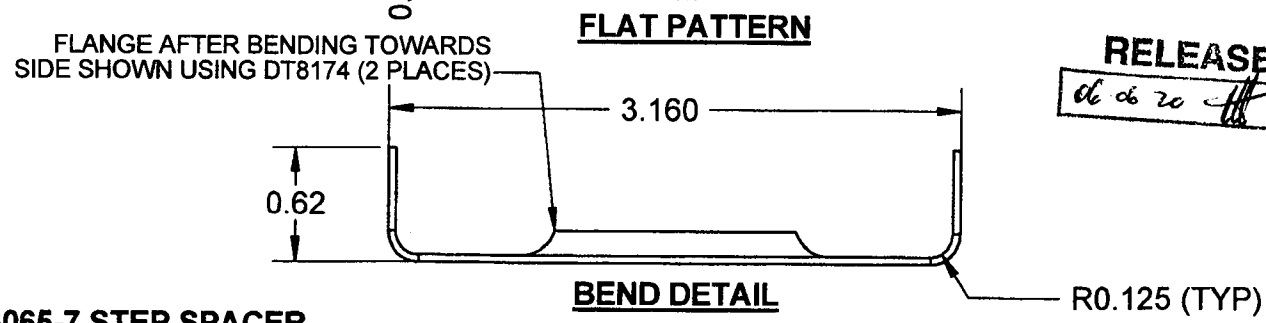

BEND DETAIL

D3065-7 STEP SPACER

1) MATERIAL: 2024-T3 (PER QQ-A-250/4) 0.040 THICK (REF DART SPEC. M2024T3S.040)
2) FINISH: ACID ETCH & ALODINE PER DART QSI 005 4.1
3) PART IS SYMMETRIC ABOUT CENTERLINE
4) BREAK ALL SHARP EDGES 0.005 TO 0.010
5) TOLERANCES ARE PER DART QSI 018 UNLESS OTHERWISE NOTED
6) ALL DIMENSIONS ARE IN INCHES

Dart Aerospace Ltd

W/O:		WORK ORDER CHANGES					
DATE	STEP	PROCEDURE CHANGE	By	Date	Qty	Approval Chief Eng / Prod Mgr	Approval QC Inspector

Part No: _____ **PAR #:** _____ **Fault Category:** _____ **NCR:** Yes No **DQA:** _____ **Date:** _____

Resolution: _____ **Disposition:** _____ **QA: N/C Closed:** _____ **Date:** _____

NCR:		WORK ORDER NON-CONFORMANCE (NCR)						
DATE	STEP	Description of NC Section A	Corrective Action Section B			Verification Section C	Approval Chief Eng	Approval QC Inspector
			Initial Chief Eng	Action Description Chief Eng	Sign & Date			

NOTE: Date & initial all entries